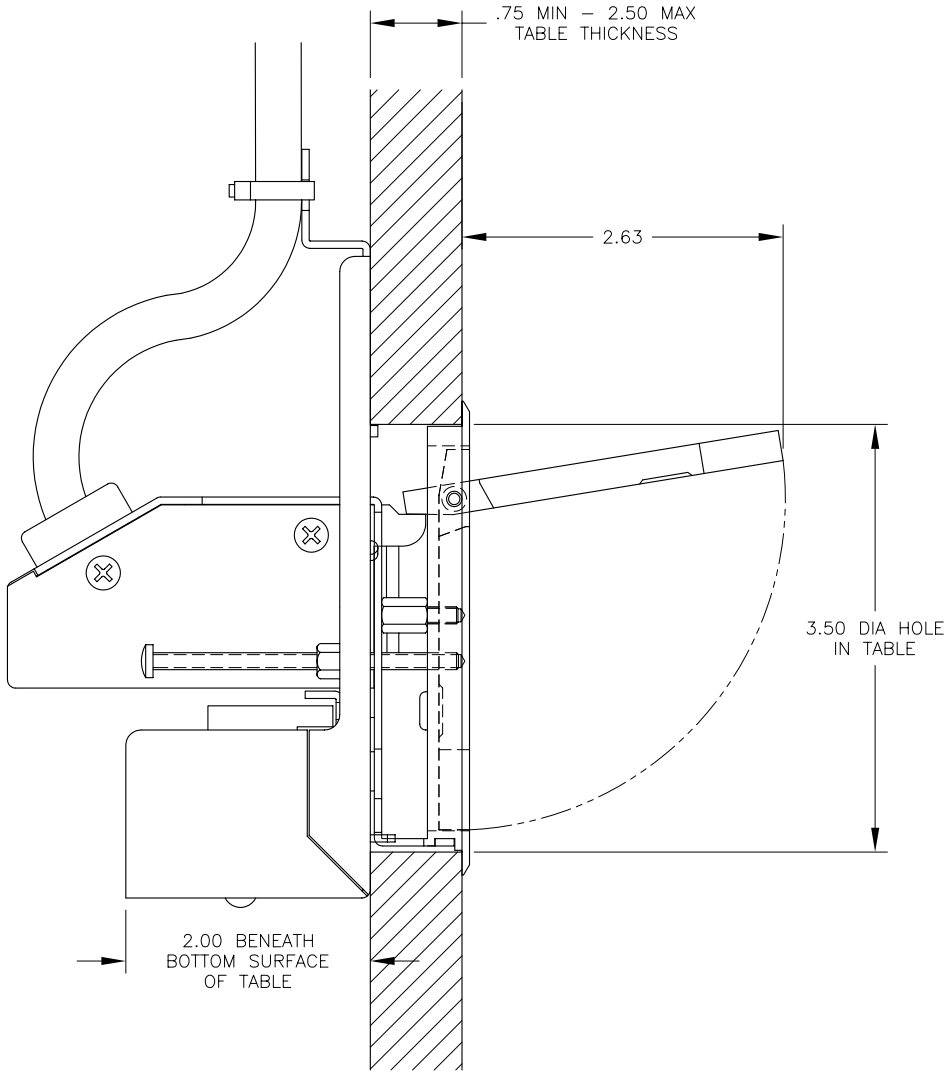

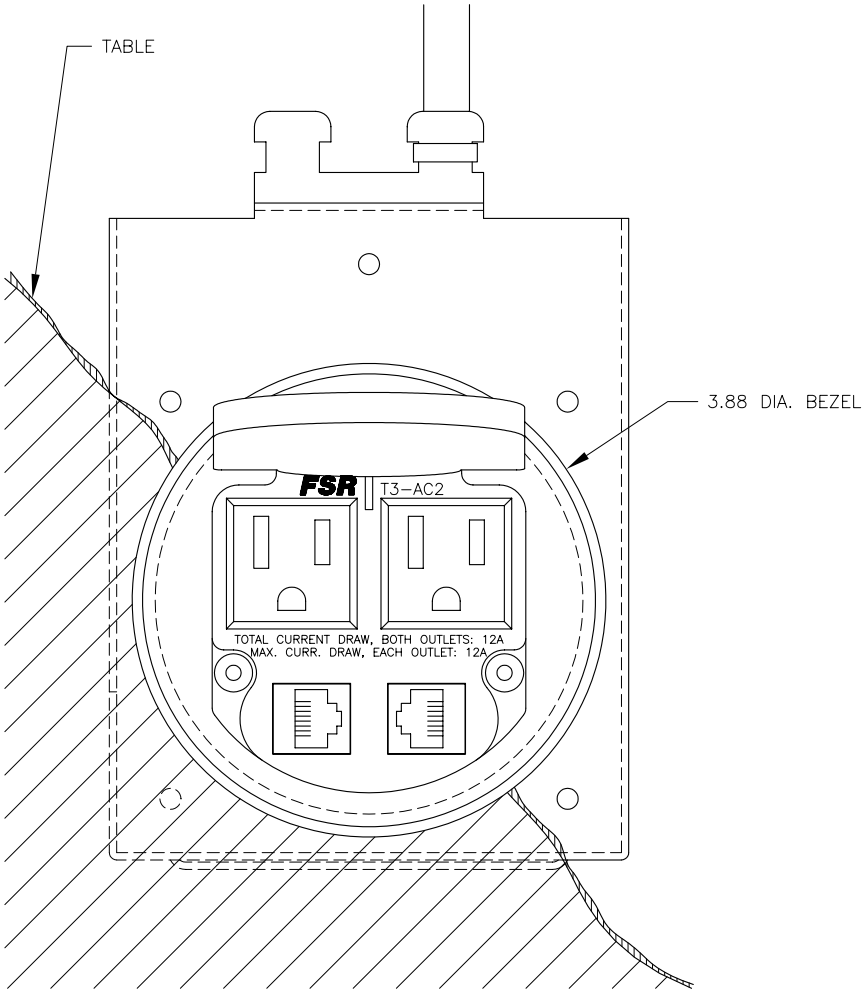

FSR inc.
244 BERGEN BLVD.
W. PATERSON, NJ 07424
TEL. (973) 785–4347
FAX (973) 785–3318

TITLE:	TABLE BOX T3–AC2
DRAWN BY: JRE	DATE: 08/08/05 REV: –
DWG#: T3–AC2	SCALE: 1:1