Welcome!

We greatly appreciate your purchase of the PNP415/417 Pop 'N Plug with Custom Tabletop Surface. We are sure you will find it reliable and simple to use. Superior performance for the right price, backed by solid technical and customer support is what ALTINEX has to offer.

We are committed to providing our customers with Signal Management Solutions® to the most demanding audiovisual installations at very competitive pricing and we welcome you to join the ranks of our many satisfied customers throughout the world.

1. Precautions and Safety Warnings

Please read this manual carefully before using your PNP415/417 Interconnect Box. Keep this manual handy for future reference. These safety instructions are to ensure the long life of your PNP415/417 and to prevent fire and shock hazards. Please read them carefully and heed all warnings.

1.1 General

- Unauthorized personnel shall not open the unit since there are high-voltage components inside.
- Qualified ALTINEX service personnel, or their authorized representatives, must perform all service

1.2 Installation Precautions

- For best results, place the PNP415/417 in a dry area away from dust and moisture.
- To prevent fire or shock, do not expose this unit to water or moisture. Do not place the PNP415/417 in direct sunlight, near heaters or heat-radiating appliances, or near any liquid. Exposure to direct sunlight, smoke, or steam can harm internal components.
- Handle the PNP415/417 carefully. Dropping or jarring can damage the unit.
- Never place fingers inside the openings of the unit. This action could cause serious injury due to sharp edges inside the PNP415/417.
- Do not place heavy objects on top of the PNP415/417. Do not use excessive force to push down on the top of the unit.
- To turn off the main power, disconnect the power cord which powers the AC socket on the PNP415/417 pop-up panel. The power outlet used should be installed as near to the equipment as possible and should be easily accessible.
- ALTINEX recommends using wall outlets with a Ground Fault Circuit Interrupter (GFCI) for maximum protection.
- Install all cables according to the instructions. Do not force or pull out any cable or power cord that is attached to the PNP415/417.

1.3 Cleaning

- Surfaces should be cleaned with a dry cloth. Never use strong detergents or solvents such as alcohol or thinner. Do not use a wet cloth or water to clean the unit.

1.4 FCC Notice

- This device complies with Part 15 of the FCC Rules. Operation is subject to the following two conditions: (1) This device may not cause harmful interference, and (2) this device must accept any interference received, including interference that may cause undesired operation.
- This equipment has been tested and found to comply with the limits for a Class A digital device, pursuant to Part 15 of the FCC Rules. These limits are designed to provide reasonable protection against harmful interference when the equipment is operated in a commercial environment. This equipment generates, uses, and can radiate radio frequency energy and, if not installed and used in accordance with the instructions found herein, may cause harmful interference to radio communications. Operation of this equipment in a residential area is likely to cause harmful interference in which case the user will be required to correct the interference at his own expense.
- Any changes or modifications to the unit not expressly approved by ALTINEX, Inc. could void the user's authority to operate the equipment.

2. Installation Procedures

Step 1. Refer to the ALTINEX website, www.altinex.com, to download the latest templates and instructions for tabletop cutting requirements and installation instructions. In order to do this, locate the PNP415 or PNP417 on the website and go to its detail page. The links to the templates, user guide, and more are on the details page.

Step 2. Print all information applicable to the installation of the PNP415/417, including the templates and any detailed installation instructions.

Step 3. Cut an opening into the table's surface. This operation should be performed by experienced professionals in order to insure accuracy and to be aesthetically pleasing.

Note: Always confirm dimensions before cutting to insure that specifications have not changed.

Step 4. Install the PNP415/417 into the table per the installation instructions provided on the website.

Step 5. Connect all PNP415/417 cables to their appropriate sources and/or destinations. The PNP415/417 is now ready for operation.

3. Limited Warranty/Return policies

Please see the ALTINEX website at www.altinex.com for details on warranty and return policies.

ALTINEX®
SIGNAL MANAGEMENT SOLUTIONS®
Tel: 714-990-2300 • Toll-Free: 1-800-ALTINEX • FAX: 714-990-3303 • E-mail: solutions@altinex.com • Web: www.altinex.com

4. Technical Specifications

Specifications are subject to change. See www.altinex.com for up-to-date information.

Features/Description	PNP417
Inputs	
Video	(2) 15-pin HD female
Audio	(2) 3.5mm jack
Twisted Pair	(4) RJ-45 female
Modem	(2) RJ-11 female
AC Power	(4) NEMA 5-15R
Outputs	
Video	(2) 15-pin HD male
Audio	(2) 3.5mm plug
Twisted Pair	(4) RJ-45 male
Modem	(2) RJ-11 male
AC Power	(4) NEMA 5-15P

Table 1. PNP415/417 General

Mechanical	PNP415/417
Min. Table Thickness	0.500 in (13 mm)
Max. Table Thickness	1.125 in (29 mm)
Diameter	4.950 in (126 mm)
Height, above table (open)	4.875 in (124 mm)
Height, below table	6.986 in (177 mm)
Width	6.000 in (152 mm)
Depth	3.817 in (97 mm)
Max. weight of custom top	22 oz (0.624 kg)
Finish	Matte Black
T° Operating	10°C-35°C
T° Maximum	40°C
Humidity	90% non-condensing

Table 2. PNP415/417 Mechanical

Electrical	PNP415/417
Power Rating (pass through AC power)	120VAC, 60Hz, 5A

Table 3. PNP415/417 Electrical

ALTINEX® SIGNAL MANAGEMENT SOLUTIONS®
Tel: 714-990-2300 • Toll-Free: 1-800-ALTINEX • FAX: 714-990-3303 • E-mail: solutions@altinex.com • Web: www.altinex.com

5. About Your PNP415/417

- Customizable to almost any table top
- Connector plates are fully compatible with PNP400 & PNP500 series
- Holds up to eight connector plates
- Smooth new look on all sides
- Cutout always matches
- Round, rectangular, or square cut-out
- Simple, slide-in installation
- Opens/closes by pressing on top
- Gas spring lift mechanism

This Pop 'N Plug uses a custom cut-out tabletop surface and hardware is attached underneath the cutout. When closed, the PNP415/417 lays flat and matches the grain on your table.

ALTINEX provides three pre-configured templates for the PNP415/417 cutouts: round, rectangular, and square. A simple press on the lid closes the unit flush with the tabletop.

The PNP415/417 design allows the connector panels to be easily installed. Just remove the top and slide the connector panels into place. In the open position, the PNP415/417 is functional yet maintains a smooth, clean appearance.

The PNP417 comes preconfigured with two standard DS901-120 sectional plates. Each plate includes the following connections: two AC power, one 15-pin HD (video), two RJ-45 (UTP), one RJ-11 (modem), and one 3.5mm audio. There are two plates and all connectors on the plates are female receptacles. Each signal connector is connected via a 6-foot cable to its corresponding male plug at the opposite end. The AC power cables are terminated with standard NEMA plugs at the end of 9-foot cords.

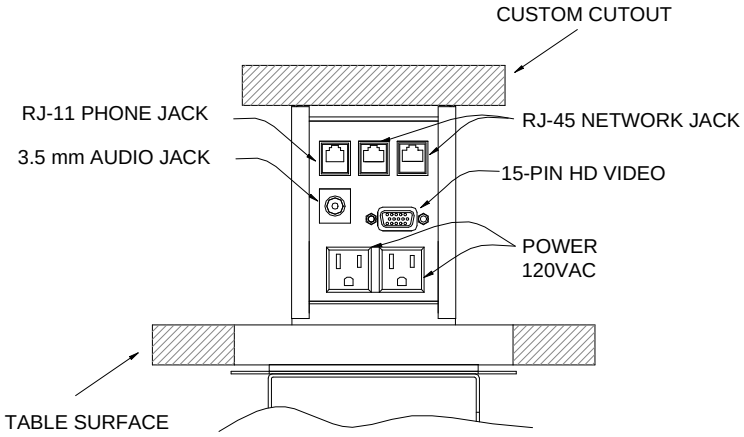

ALTINEX®
SiGNAL MANAGEMENT SOLUTIONS®
Tel: 714-990-2300 • Toll-Free: 1-800-ALTINEX • FAX: 714-990-3303 • E-mail: solutions@altinex.com • Web: www.altinex.com

6. Application Diagrams

Diagram 1: Typical Setup

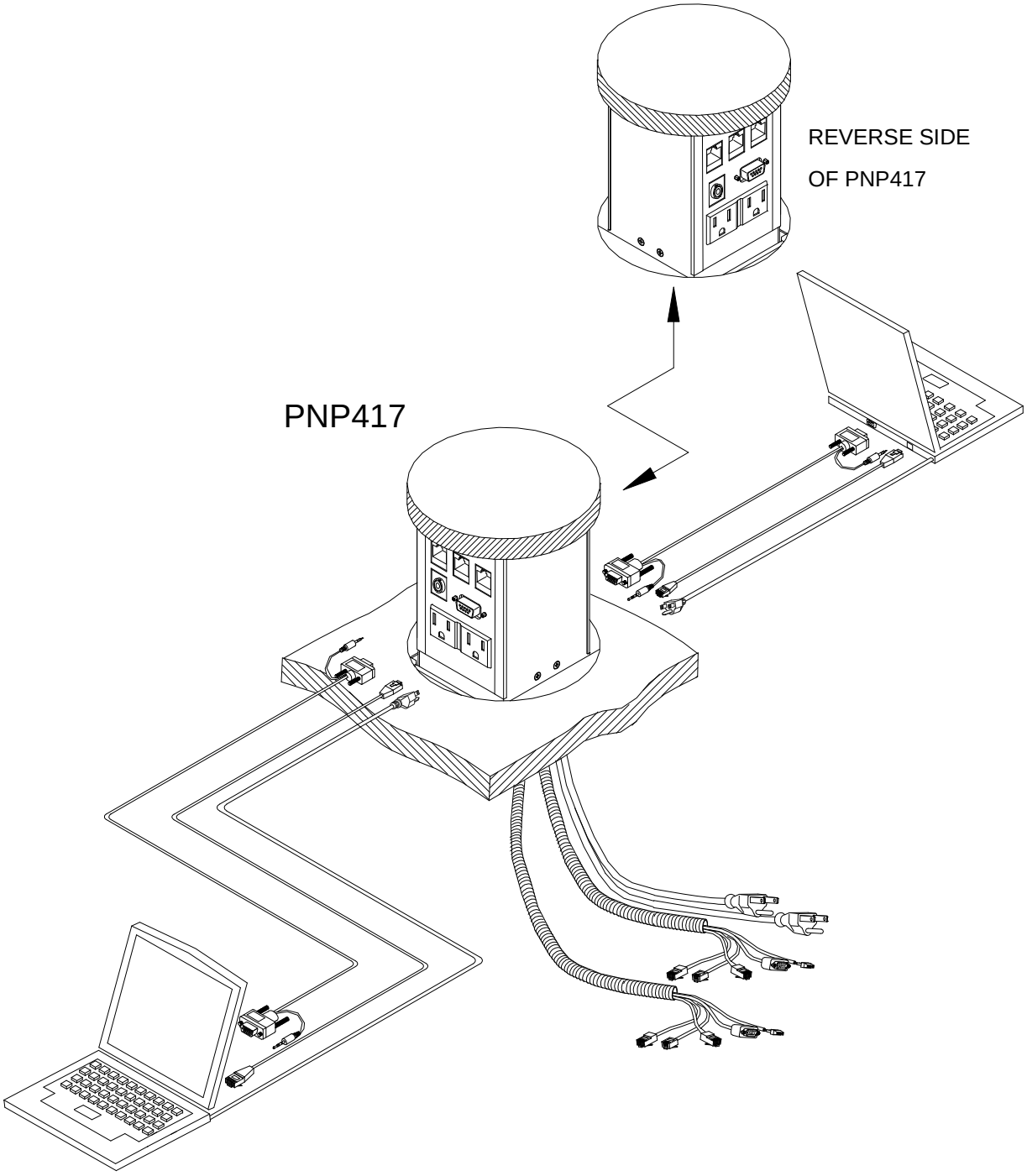

ALTINEX®
SIGNAL MANAGEMENT SOLUTIONS®
Tel: 714-990-2300 • Toll-Free: 1-800-ALTINEX • FAX: 714-990-3303 • E-mail: solutions@altinex.com • Web: www.altinex.com

Diagram 2: Cutout Dimensions

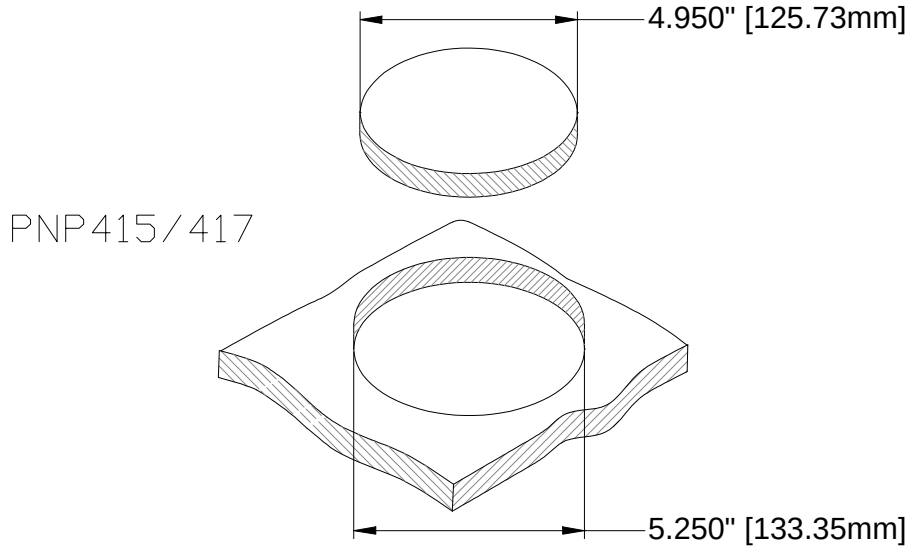

Diagram 3: Closed Dimensions

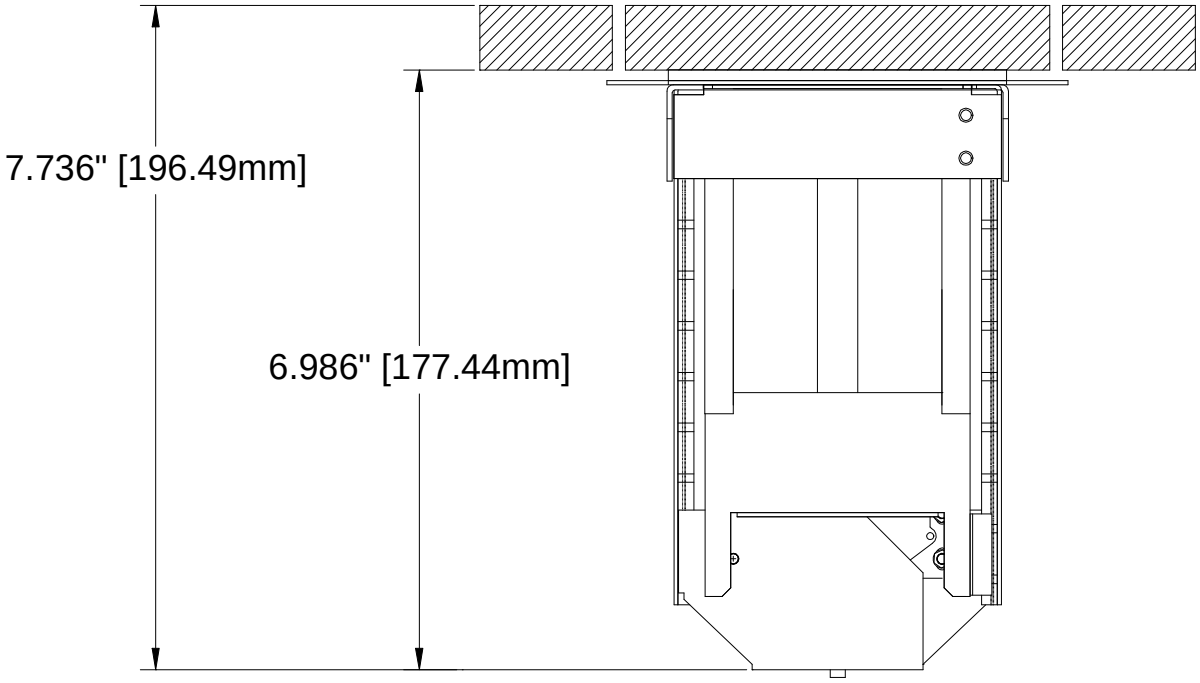

ALTINEX® SIGNAL MANAGEMENT SOLUTIONS®
Tel: 714-990-2300 • Toll-Free: 1-800-ALTINEX • FAX: 714-990-3303 • E-mail: solutions@altinex.com • Web: www.altinex.com

Diagram 2: Front View Dimensions

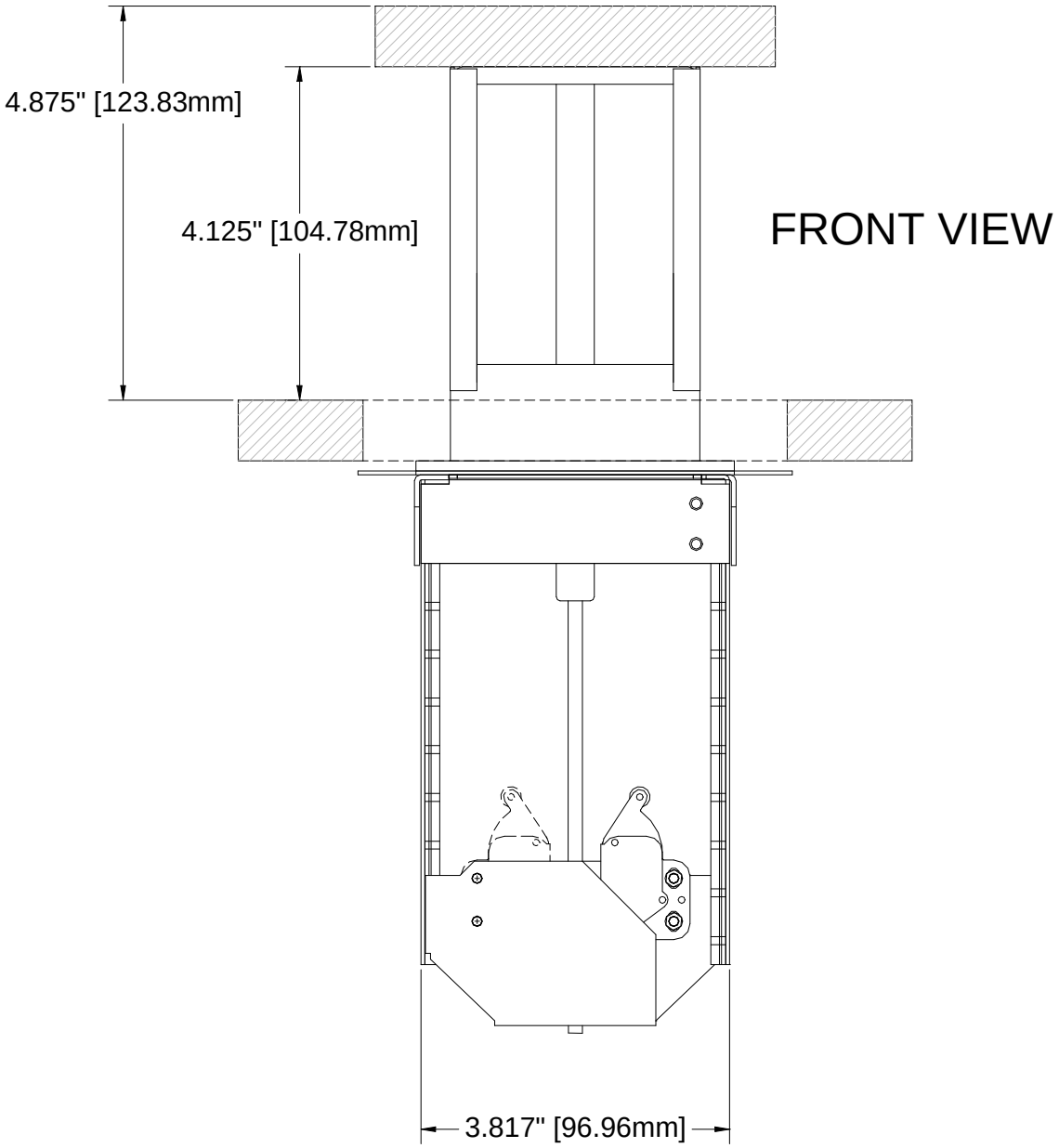

ALTINEX®
SIGNAL MANAGEMENT SOLUTIONS®
Tel: 714-990-2300 • Toll-Free: 1-800-ALTINEX • FAX: 714-990-3303 • E-mail: solutions@altinex.com • Web: www.altinex.com

Diagram 3: Side View Dimensions

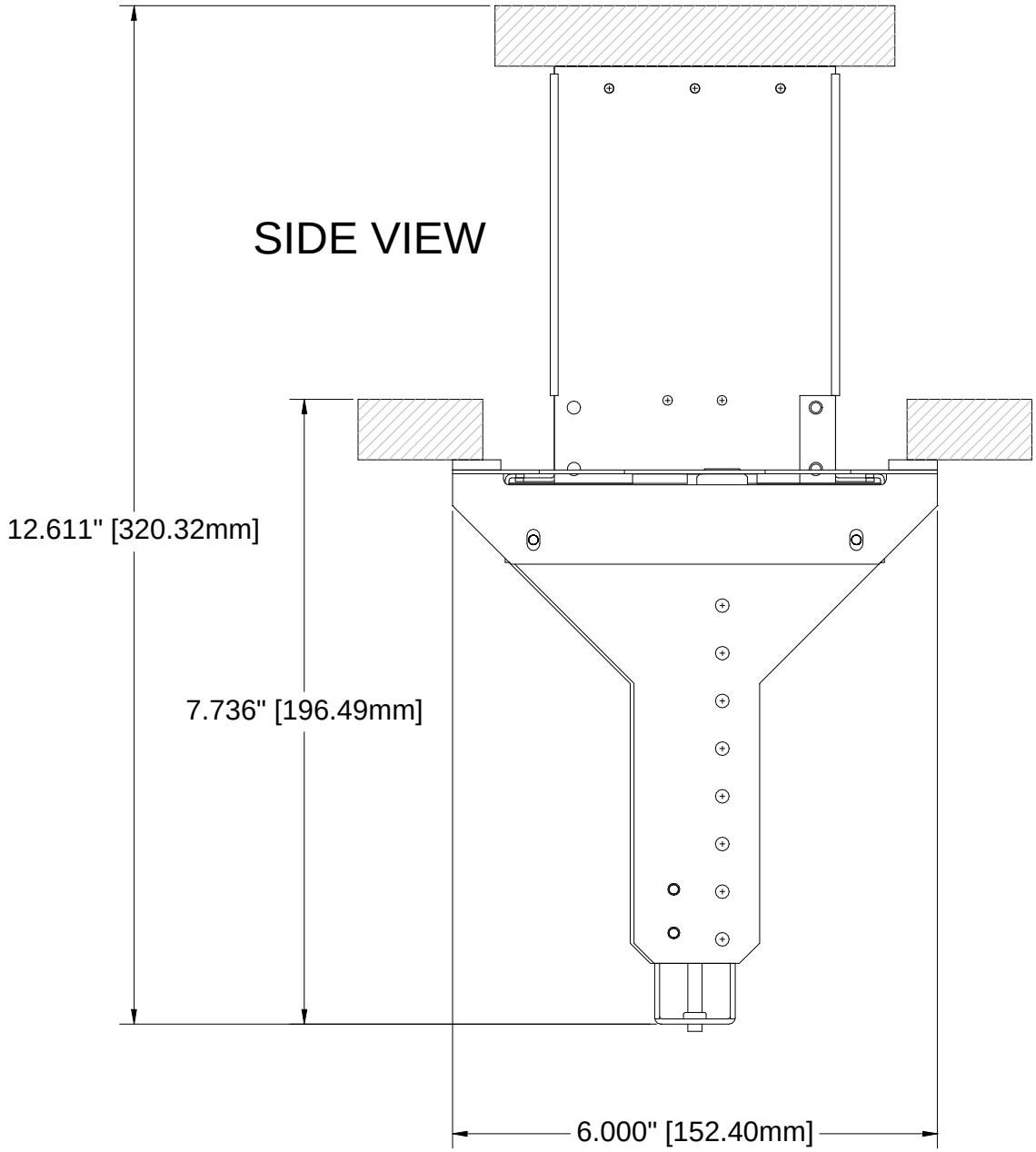

ALTINEX®
SIGNAL MANAGEMENT SOLUTIONS®
Tel: 714-990-2300 • Toll-Free: 1-800-ALTINEX • FAX: 714-990-3303 • E-mail: solutions@altinex.com • Web: www.altinex.com

7. Operation

7.1 Opening and Closing the PNP415/417

The PNP415/417 will open easily when the top is pressed down and then released.

When the PNP415/417 is not in use, simply press the top down until it is level with the surface of the table and then release. The unit will remain hidden until needed again.

7.2 Power/Signal Connections

Connect external devices to the appropriate connector on the PNP415/417. Remember, the devices plugged into the AC power connectors should not draw more than 5A AC.

8. Troubleshooting Guide

The PNP415/417 unit supplied was carefully tested and no problems were detected. However, we would like to offer the following suggestions:

- Please make sure that the highest quality network cables are used.
- Make sure that no cable or power cord is damaged or pinched. If there has been damage to the unit, do not use the PNP415/417. Please contact ALTINEX at (714) 990-2300 to have the unit repaired.

ALTINEX® SIGNAL MANAGEMENT SOLUTIONS®
Tel: 714-990-2300 • Toll-Free: 1-800-ALTINEX • FAX: 714-990-3303 • E-mail: solutions@altinex.com • Web: www.altinex.com